IPAD MINI2No Power ON Front Camera cannot be used

[Fault phenomenon]

The front Camera cannot be turned on.

[Maintenance process]

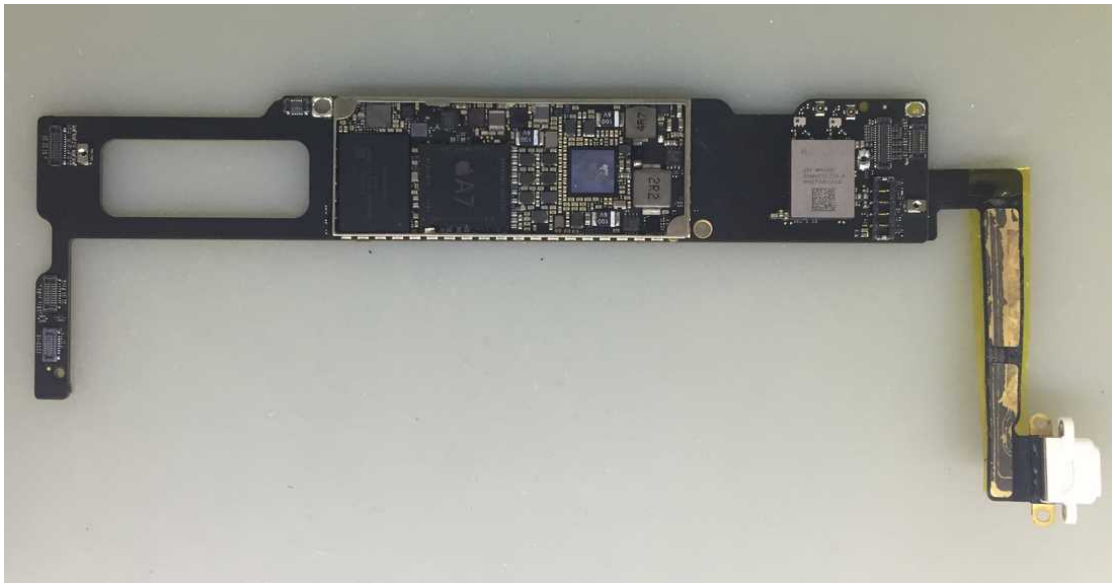

Remove the motherboard and measure the front Camera interface diode value, and find that the ISP1_CAM_FRONT_SDA_F and ISP1_CAM_FRONT_SCL_F values are infinite.

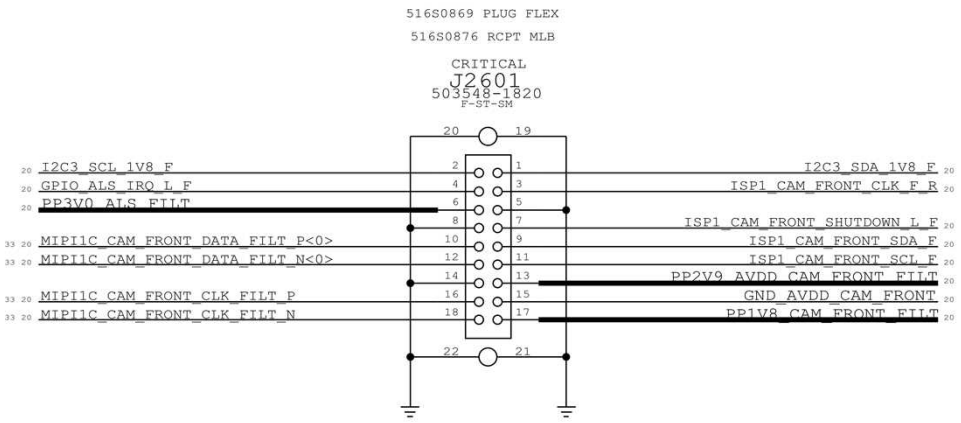

The map isp1_cam_front_sda_f and isp1_cam_front_scl_f enter the cpu via u2600.

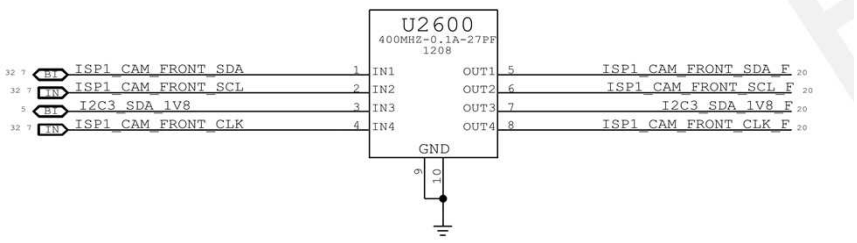

Measure the ground value of the u2600 into the cpu end and determine that the u2600 is damaged.

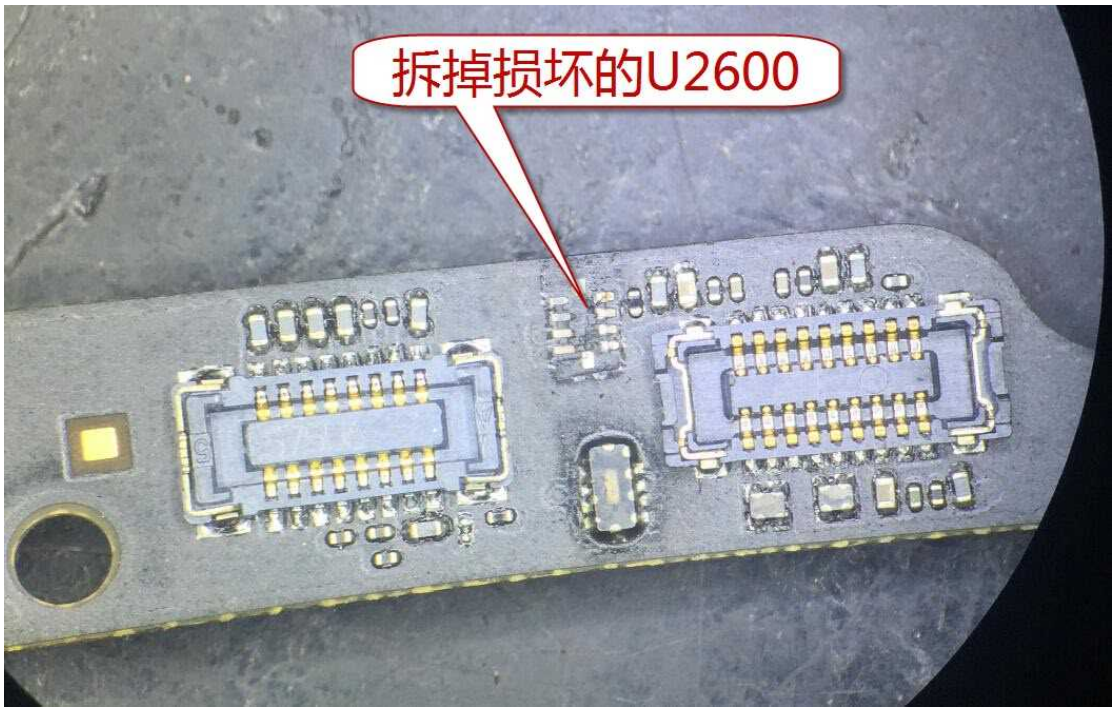

U2600 is a sense of row, can be directly connected, after the replacement of the good u2600 fault repair.

